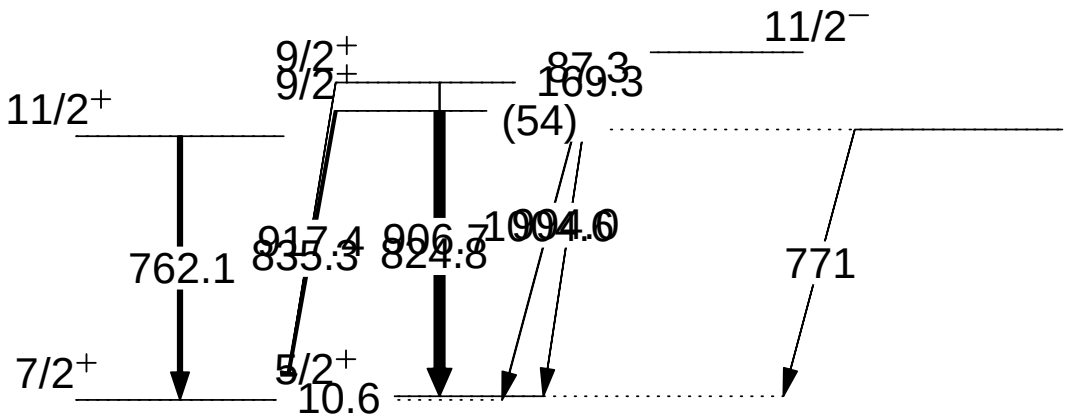
11/2−
9/2+
87.3
9/2+
169.3
11/2+
(54)
917.4
906.7
1094.6
835.3
824.8
762.1
771
7/2+
5/2+
10.6