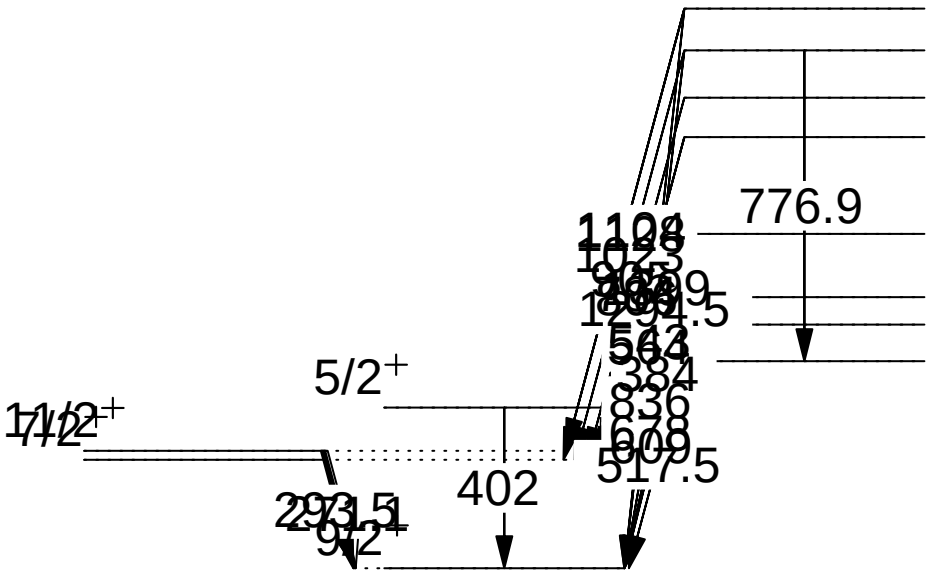
776.9
5/2+
402
517.5