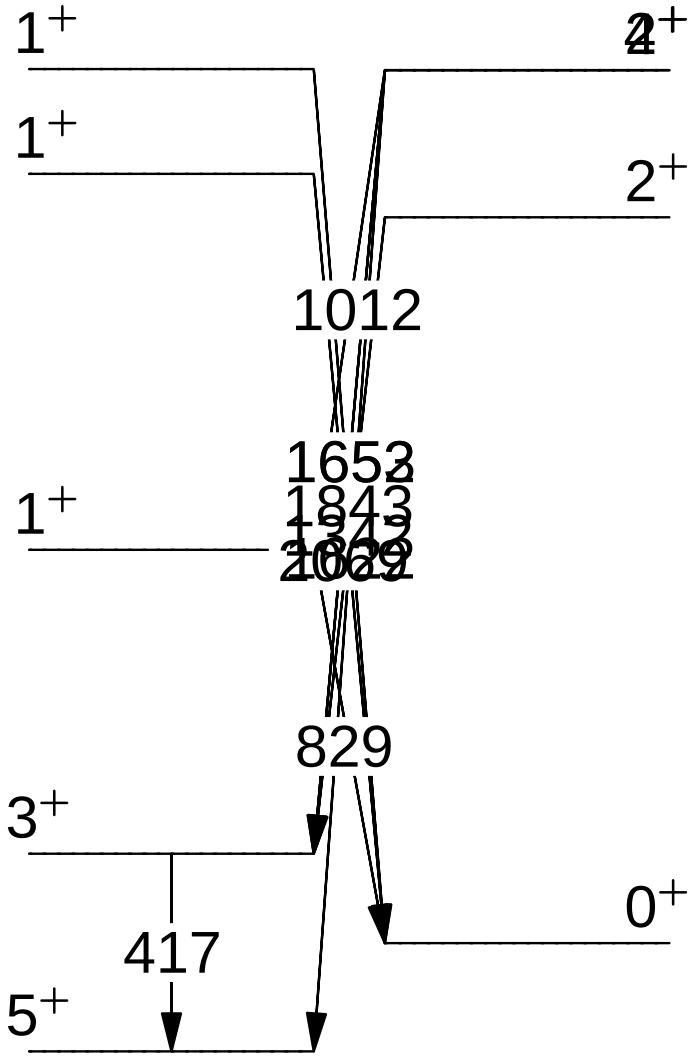
1+
1+
1+
2+
2+
1012
1653
1843
829
3+
417
5+
0+