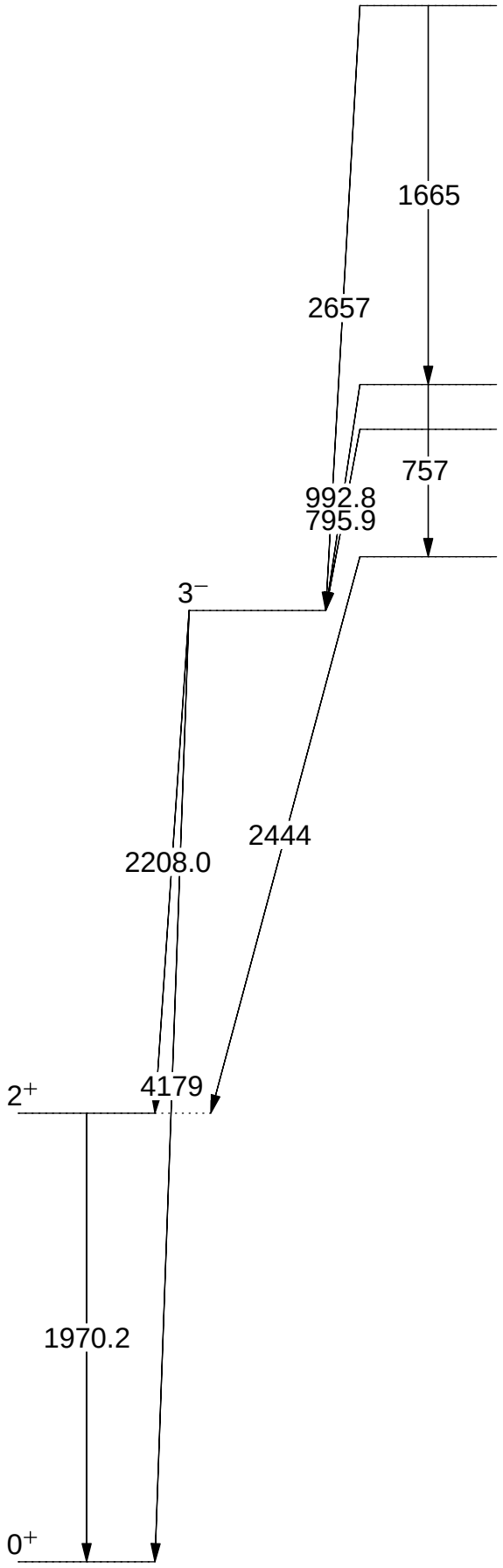
1665
2657
757
992.8
795.9
3⁻
2444
2208.0
2⁺
4179
1970.2
0⁺