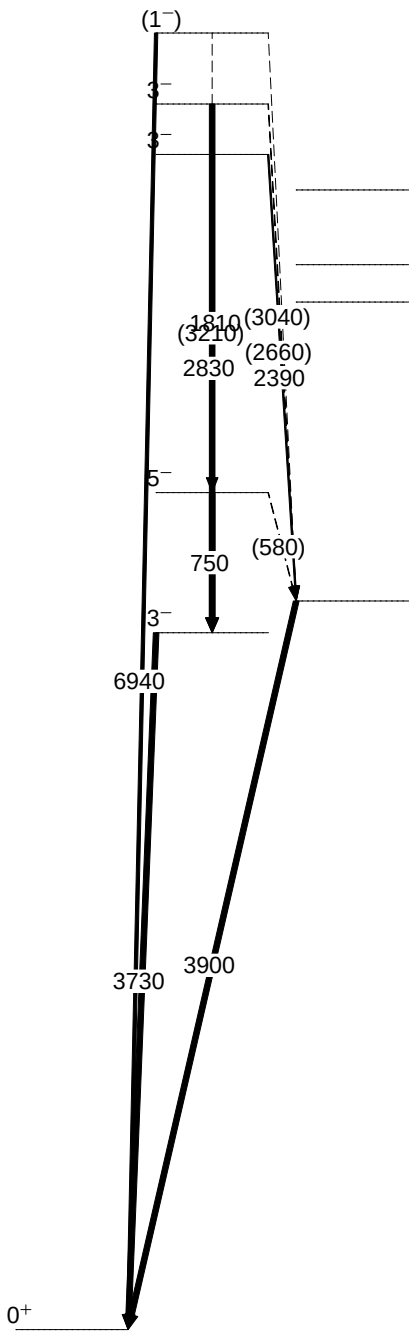
(1⁻)
3⁻
3⁻
1810
(3210)
2830
(3040)
(2660)
2390
5⁻
750
(580)
3⁻
6940
3730
3900
0⁺