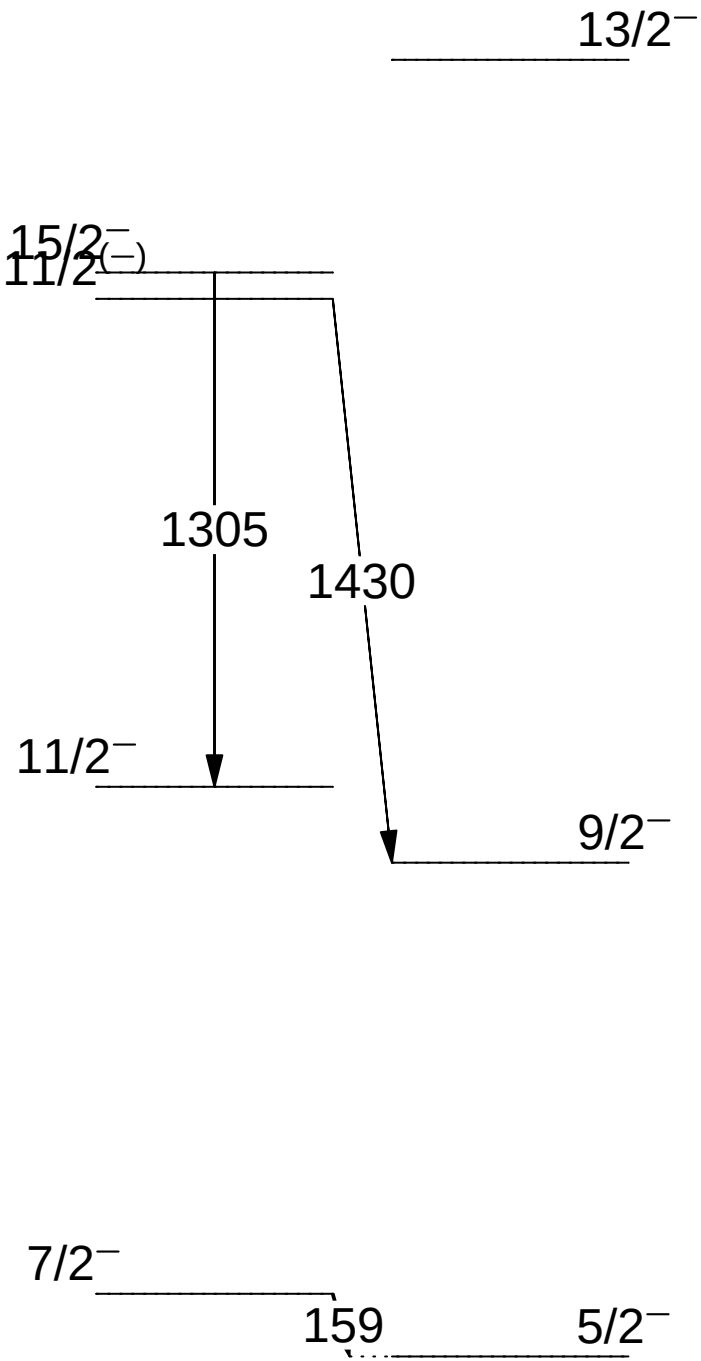
13/2−
15/2−
11/2(−)
1305
1430
11/2−
9/2−
7/2−
159
5/2−