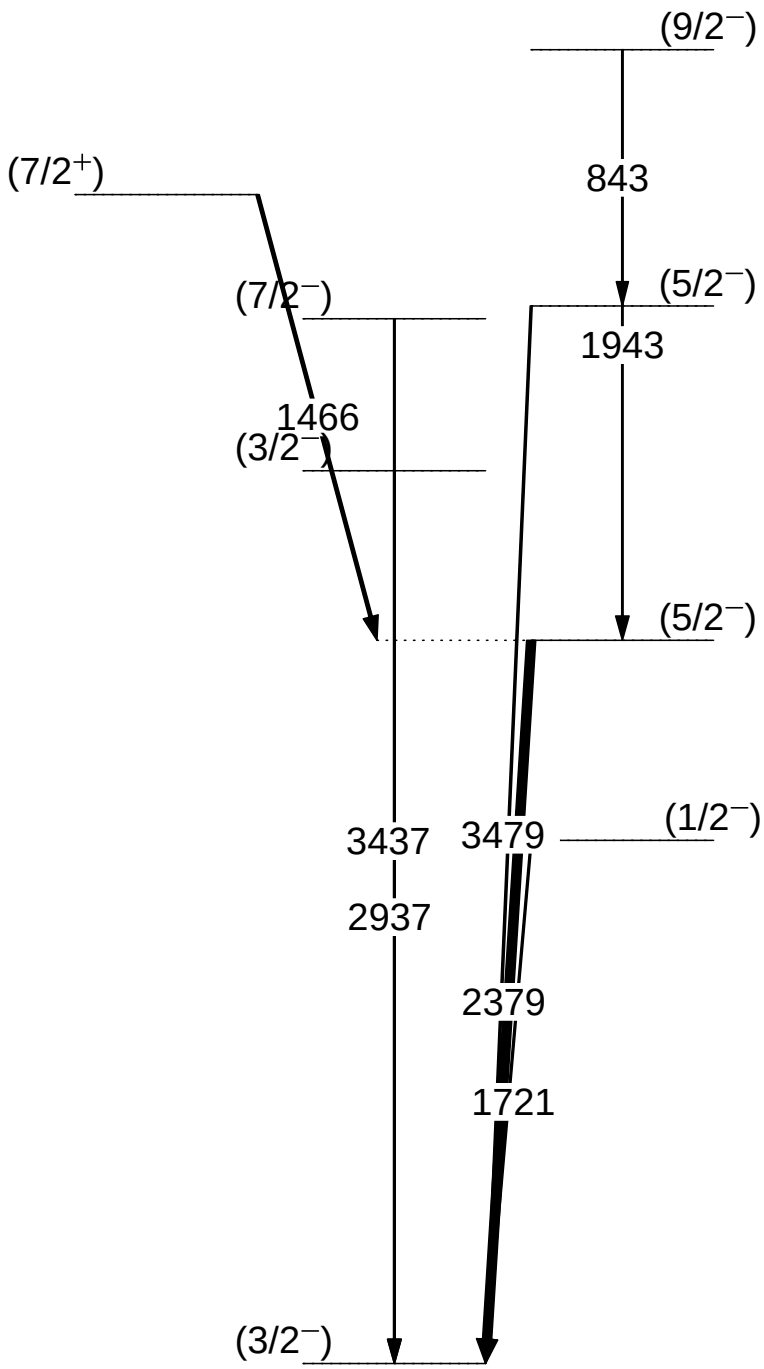
(9/2⁻)
843
(7/2⁺)
(5/2⁻)
(7/2⁻)
1943
1466
(3/2⁻)
(5/2⁻)
(1/2⁻)
3437
3479
2937
2379
1721
(3/2⁻)