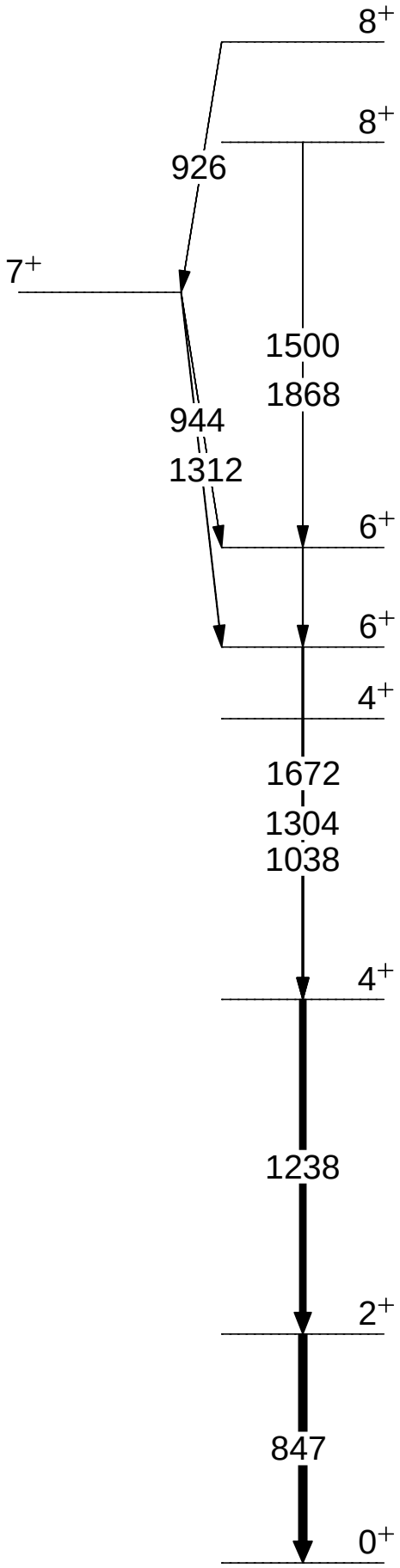
8+
8+
926
7+
1500
1868
944
1312
6+
6+
4+
1672
1304
1038
4+
1238
2+
847
0+