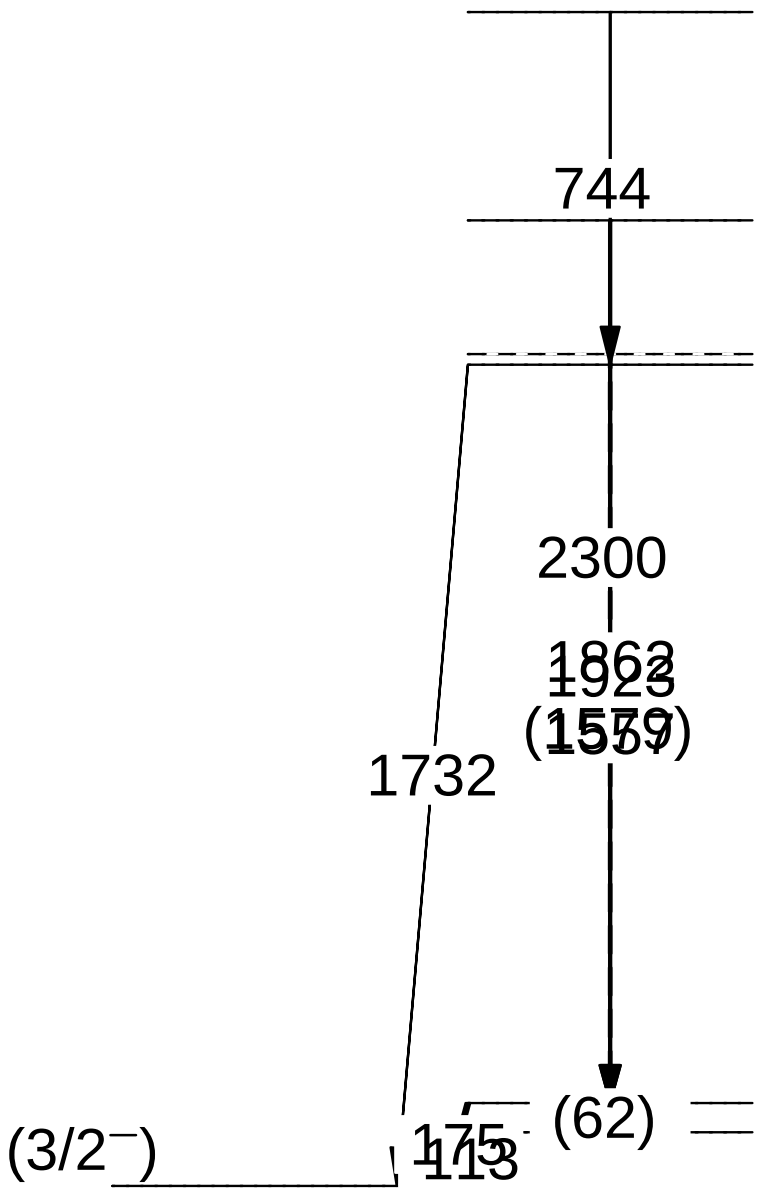
744
2300
1863
1923
(1579)
1557
1732
(62)
(3/2⁻)
175
113