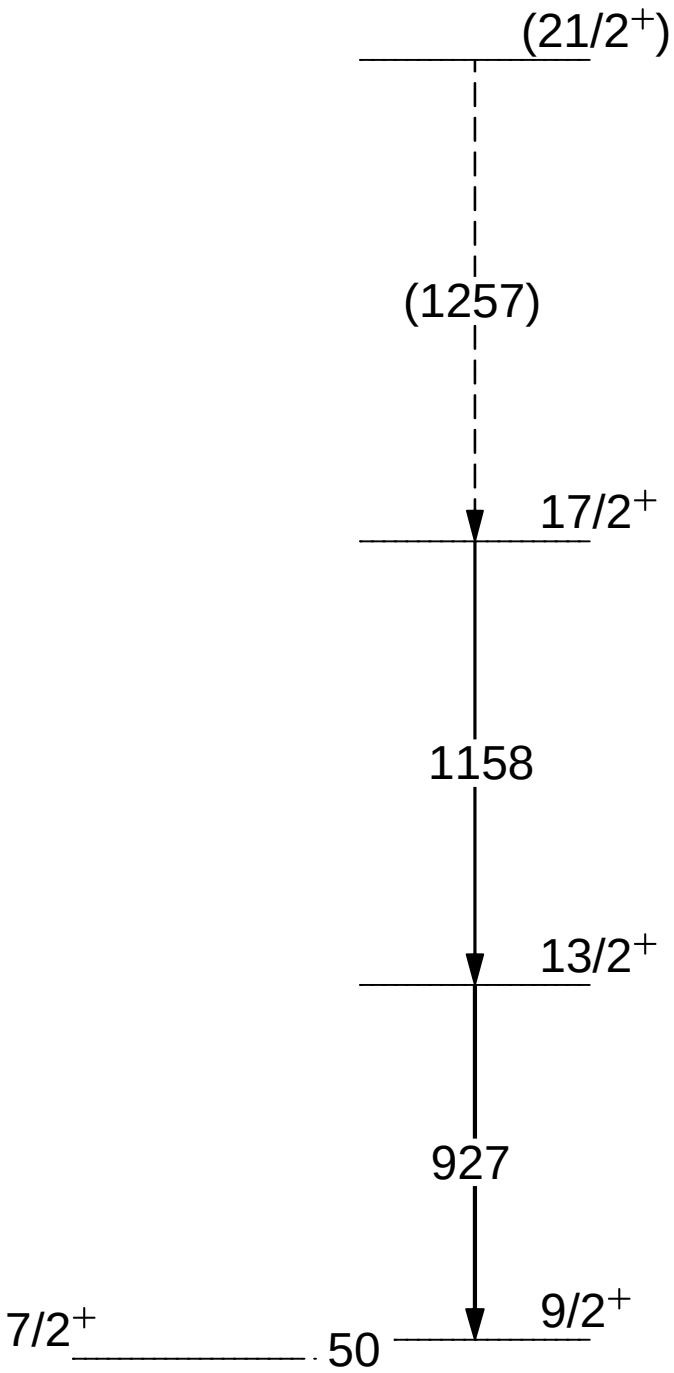
(21/2+)
(1257)
17/2+
1158
13/2+
927
9/2+
7/2+
50