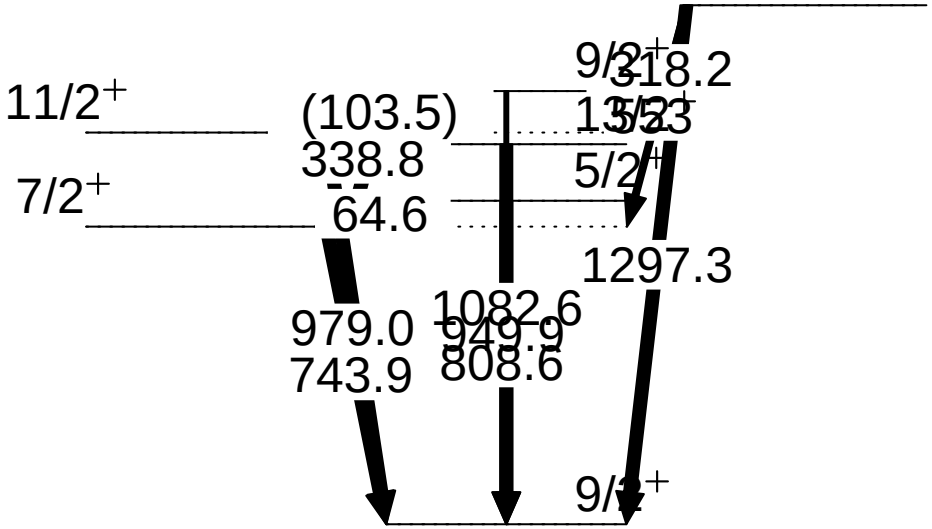
11/2+
7/2+
(103.5)
338.8
64.6
979.0
743.9
1082.6
949.9
808.6
9/2+
13/2+
5/2+
318.2
523
1297.3
9/2+